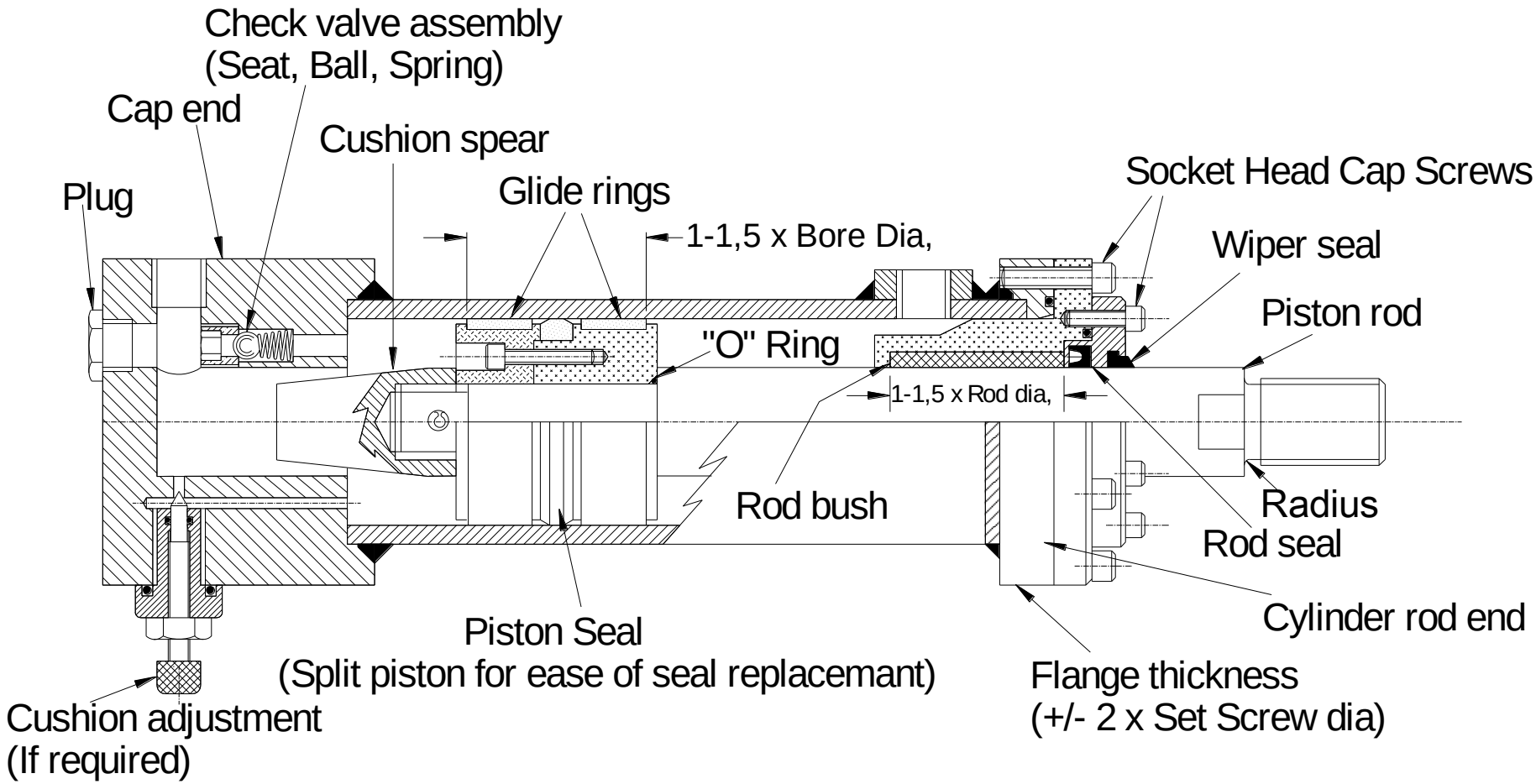

Copyright 2020 - Garnett Cross
http://GarnettCross.com